THIRD ANGLE PROJECTION

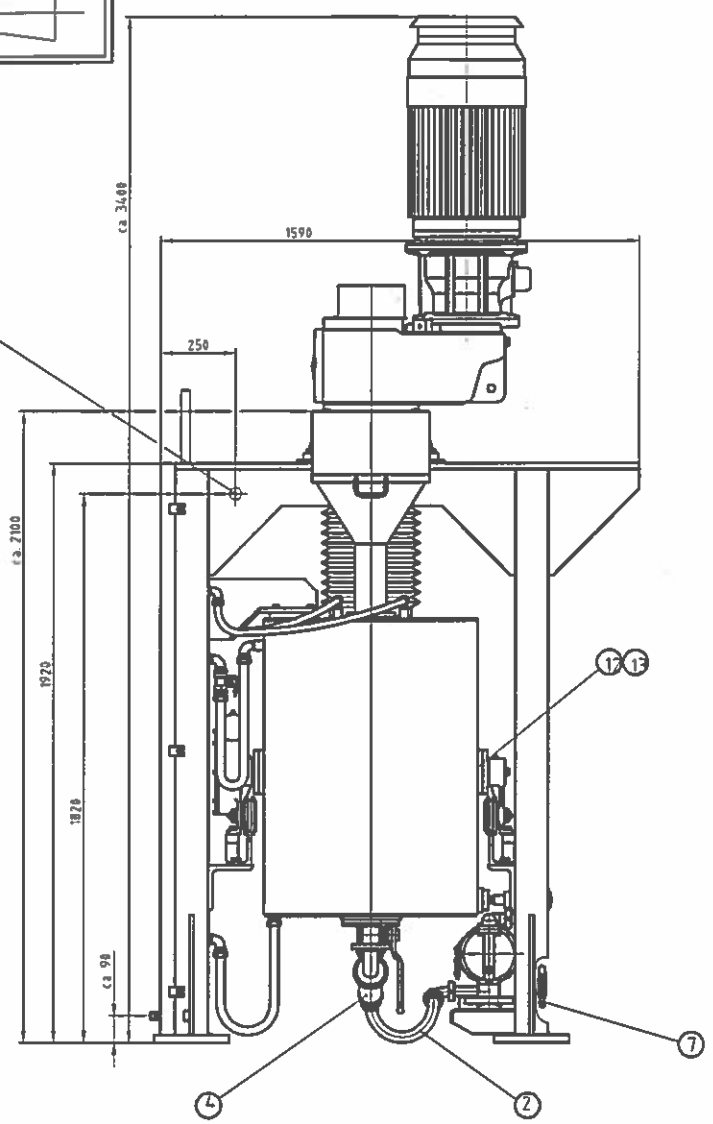

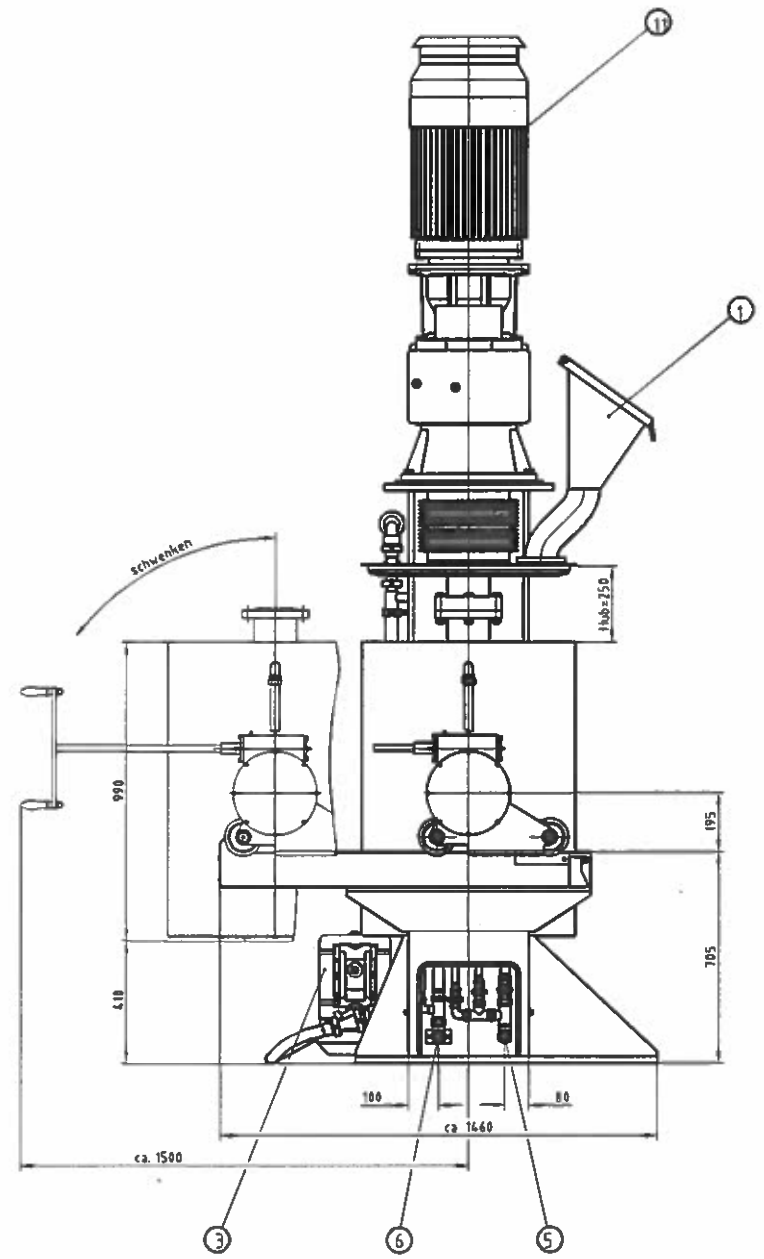

NOTES:

1. MOTOR AMPS TO BE TAKEN FROM MOTOR NAMEPLATE AND ROUND OFF TO THE NEAREST VALUE. IE. 47.4 = 47, 47.5= 48
2. DIMENSIONS ARE FOR REFERENCE OLY.
3. REQUIRES INSTRUMENT QUALITY AIR (CLEAN & DRY)

DESCRIPTIONS:

1. FEEDING HOPPER
2. PRODUCT PIPING DN25
3. DIAPHRAGM PUMP DL25
4. PRODUCT FILTER
5. COOLING WATER INLET DN25 HOSE BARB
6. COOLING WATER OUTLET DN25 HOSE BARB
7. COMPRESSED AIR DN10 HOSE CONNECTION
8. SOVENT PIPE R1" COONECTION
9. INERT GAS R3/8" MALE CONNECTION
10. GROUND CONNECTION
11. 30 KW PROTECTION CLASS
12. GRINDING CHAMBER APPROX 250L
13. 1.4301 STAINLESS STEEL AGAITATOR SHAFT WITH TUNSTEN-CARBINESLEEVES AND PADDLES OF PEGS

ELECTRICAL CLASIFICATION:

480V/60 HZ/3 PHASES
CONTROL VOLTAGE 115VAC/24 VDC

DRY WEIGHT APPROX 4630 LBS (2100 KG)
DRAWING WITH POSSIBLE SPECIAL DESIGN

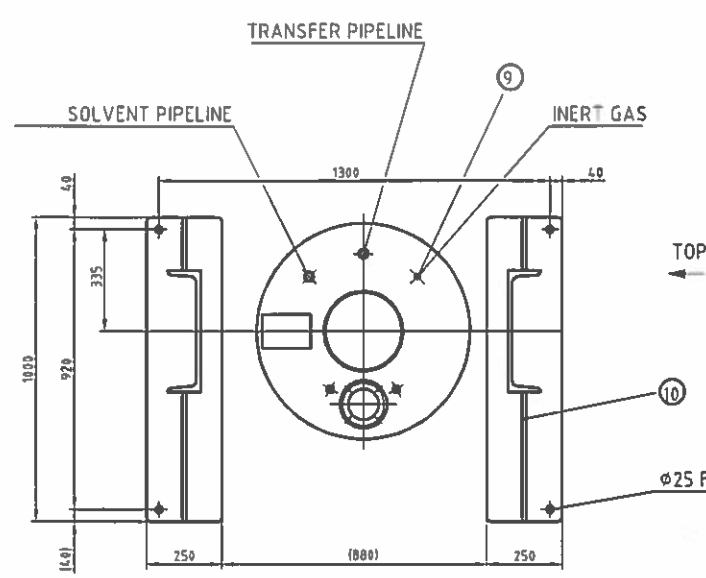

TOP VIEW GRINDING CHMABER LID AND BASE PLATE.

⌀25 FOR DOWEL SCREW DRILED DURING ASSEMBLY ACCORDING TO THE STAND

Scale	Paper size	General tolerances DIN ISO 2768-mK	CAD	Description
1:400	C			GENERAL ARRANGEMENT OF PRK 32S

	Date	Name
Drawn	17 12 2015	D TRAN
checked		
SAP	17 12 2015	RUMMEL

NETZSCH

Type	Source
	Rept. by
	Rept. for

Issue	Revision	Date	Name
00	89808	17.12.2015	DTRAN

Document No. NPT/ELM 4000016349-00

© NETZSCH xxx
Copyright reserved. This drawing or any of its contents must not be passed to a third party, neither must any part be reproduced without written permission from NETZSCH

UNCONTROLLED COPY